Building Inspection Division
THESE PLANS HAVE BEEN REVIEWED FOR COMPLIANCE WITH THE CURRENT EDITION OF THE FLORIDA BUILDING CODE
Lakeland
Date: 11/15/19
Permit Number: BLD19-06035

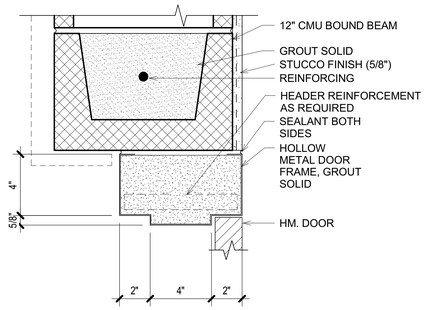

5 **HEAD DETAIL**
Scale: 3" = 1'-0"
SCALE: 3" = 1'-0" 0 6" 1'-0"

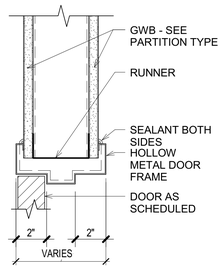

1 **HEAD DETAIL**
Scale: 3" = 1'-0"
SCALE: 3" = 1'-0" 0 6" 1'-0"

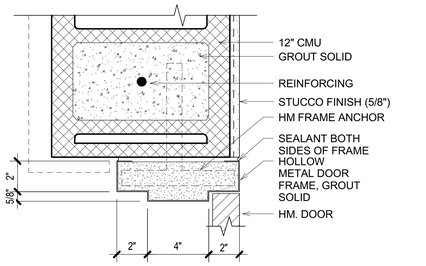

6 **JAMB DETAIL**
Scale: 3" = 1'-0"
SCALE: 3" = 1'-0" 0 6" 1'-0"

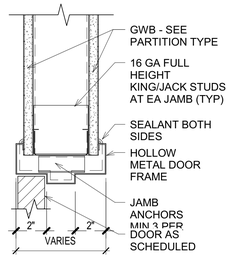

2 **JAMB DETAIL**
Scale: 3" = 1'-0"
SCALE: 3" = 1'-0" 0 6" 1'-0"

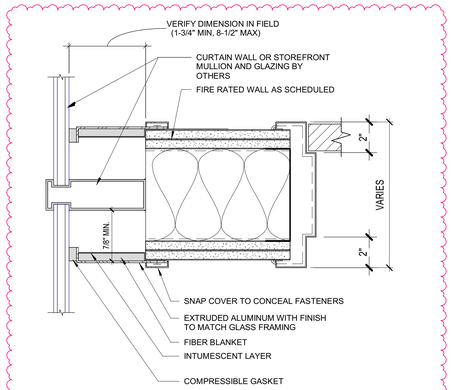

7 **2HR - STOREFRONT MULLION JAMB DETAIL**
Scale: 3" = 1'-0"

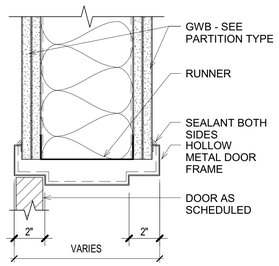

3 **HEAD DETAIL**
Scale: 3" = 1'-0"
SCALE: 3" = 1'-0" 0 6" 1'-0"

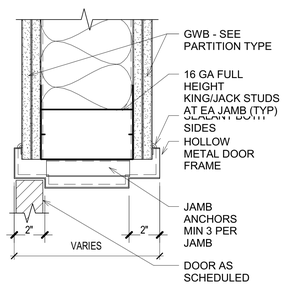

4 **JAMB DETAIL**
Scale: 3" = 1'-0"
SCALE: 3" = 1'-0" 0 6" 1'-0"

This drawing has been prepared for the use of AECOM's client and may not be used, reproduced or relied upon by third parties, except as agreed by AECOM and its client, as required by law or for use by governmental reviewing agencies. AECOM accepts no responsibility, and denies any liability whatsoever, to any party that modifies this drawing without AECOM's express written consent. Do not scale this document. All measurements must be obtained from the stated dimensions.

AECOM
BATSON-COOK CONSTRUCTION

PROJECT

PUBLIX HEADQUARTERS BUILDING ADDITION AND PARKING LOT EXPANSION

3300 PUBLIX CORPORATE PARKWAY
LAKELAND, FL 33811

CLIENT

Publix
3300 PUBLIX CORPORATE PARKWAY
LAKELAND, FL 33811

www.publix.com

CONSULTANT

AECOM

AECOM TECHNICAL SERVICES, INC.
800 Douglas Entrance
North Tower, 2nd Floor
Coral Gables, FL 33134
305.444.4691 tel 305.447.3580 fax
www.aecom.com

ARCHITECTURE
LICENSE NO. AA26000687

ENGINEERING
CA LIC. NO. 8115

www.aecom.com

REGISTRATION

STATE OF FLORIDA
STEPHEN PANZARINO
AR92622
REGISTERED ARCHITECT

STEPHEN PANZARINO, REGISTERED ARCHITECT, STATE OF FLORIDA, LICENSE NO. AR92622

THIS ITEM HAS BEEN DIGITALLY SIGNED AND SEALED BY STEPHEN PANZARINO, REGISTERED ARCHITECT, STATE OF FLORIDA, LICENSE NO. AR92622 ON THE DATE INDICATED HERE. PRINTED COPIES OF THIS DOCUMENT ARE NOT CONSIDERED SIGNED AND SEALED AND THE SIGNATURE MUST BE VERIFIED ON ANY ELECTRONIC COPIES

Panzarino, Stephen
Digitally signed by Panzarino, Stephen
DN: CN="Panzarino, Stephen", OU=USTPA1, OU=US, OU=AMER, OU=AECOMUsers, DC=na, DC=aecomnet, DC=com
Date: 2019.10.31 12:22:26-04'00'

NOTICE: THE OFFICIAL RECORD OF THIS SHEET IS THE ELECTRONIC FILE SIGNED AND SEALED UNDER RULE 61G1-16.005 F.A.C.

ISSUE/REVISION

I/R	DATE	DESCRIPTION
1	OCT 28, 2019	PERMIT COMMENTS
0	AUG 23, 2019	CONSTRUCTION DOCUMENTS

PROJECT NUMBER

60601397

SHEET TITLE

DETAILS - OPENINGS

SHEET NUMBER

A6-2-01

©2016 AECOM Corporation

Project Management Initials: Designer: Designer Checker: Checker Approved: ApproverARCH E1 30"x42"
Last Plotted: 10/29/2019 5:00:00 PM
Filename: BIM 360://60601397-Publix HQ/60601397_Publix HQ_ARCH_R2019.rvt
Printed on ___% Post-Consumer Recycled Content Paper